THIS DRAWING IS UNPUBLISHED. RELEASED FOR PUBLICATION 20
© COPYRIGHT 20 BY TYCO ELECTRONICS CORPORATION. ALL RIGHTS RESERVED.

LOC	DIST
CM	00

REVISIONS

P	LTR	DESCRIPTION	DATE	DWN	APVD
	O	REVISED PER 0G3B-0901-04	07OCT04	KW	DB

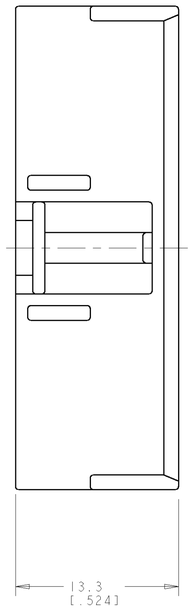

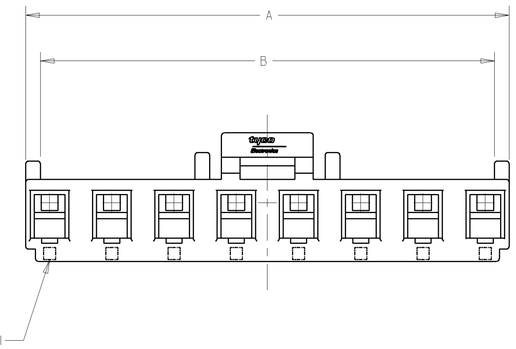

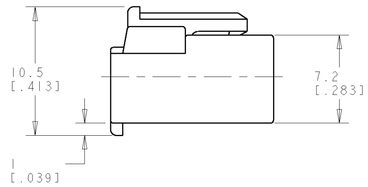

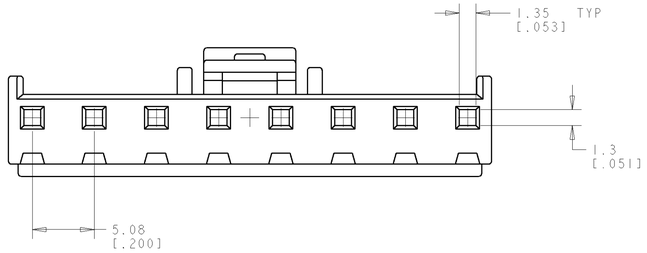

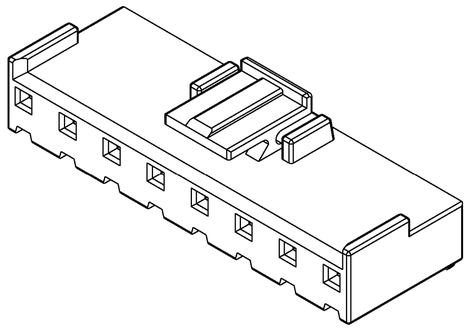

DIM B	DIM A	CKT	PART NO.
57.38 [2.259]	59.78 [2.354]	12	1-1744036-2
52.28 [2.058]	54.7 [2.154]	11	1-1744036-1
47.22 [1.859]	49.62 [1.954]	10	1-1744036-0
42.14 [1.659]	44.54 [1.754]	9	1744036-9
37.06 [1.459]	39.46 [1.554]	8	1744036-8
31.98 [1.259]	34.38 [1.354]	7	1744036-7
26.9 [1.059]	29.3 [1.154]	6	1744036-6
21.82 [0.859]	24.22 [0.954]	5	1744036-5
16.74 [0.659]	19.14 [0.754]	4	1744036-4
11.66 [0.459]	14.06 [0.554]	3	1744036-3
6.58 [0.259]	8.98 [0.354]	2	1744036-2

THIS DRAWING IS A CONTROLLED DOCUMENT FOR TYCO ELECTRONICS CORPORATION. IT IS SUBJECT TO CHANGE WITHOUT NOTICE. CONTACT THE ORIGINATING ORGANIZATION SHOULD BE CONTACTED FOR THE LATEST REVISION.

DIMENSIONS: mm

TOLERANCES UNLESS OTHERWISE SPECIFIED:
0 PLC ±-
1 PLC ±-
2 PLC ±0.13 [.005]
3 PLC ±-
4 PLC ±-
ANGLES ±-

MATERIAL: NYLON, UL94V-0 NATURAL
FINISH: -
-

DWN K. WHITAKER 07OCT2004
CHK D. BOSSI 07OCT2004
APVD D. BOSSI 07OCT2004
PRODUCT SPEC -
APPLICATION SPEC -
WEIGHT -

tyco Electronics
Tyco Electronics
Harrisburg, PA 17105-3608

NAME: RECEPTACLE, ECONOMY POWER, .200 CENTERLINE

SIZE	CAGE CODE	DRAWING NO	RESTRICTED TO
A1	00779	C-1744036	-

CUSTOMER DRAWING | SCALE 4:1 | SHEET 1 OF 1 | REV O

METRIC