DRAWING MADE IN THIRD ANGLE PROJECTION

THIS DRAWING IS UNPUBLISHED. RELEASED FOR PUBLICATION ,19 .
© COPYRIGHT 19 BY AMP INCORPORATED. ALL INTERNATIONAL RIGHTS RESERVED.

LOC	DIST
AF	50

REVISIONS				
ZONE	LTR	DESCRIPTION	DATE	APPD
	C	REL PER 0G3A-0153-01	20MAR01	JR/JH

1 FASTON TERMINALS, BASE P/N 63654, ARE USED IN THIS PRODUCT.

2 TIN PLATE PER MIL-T-10727, 0.002032 [.000080] MIN.

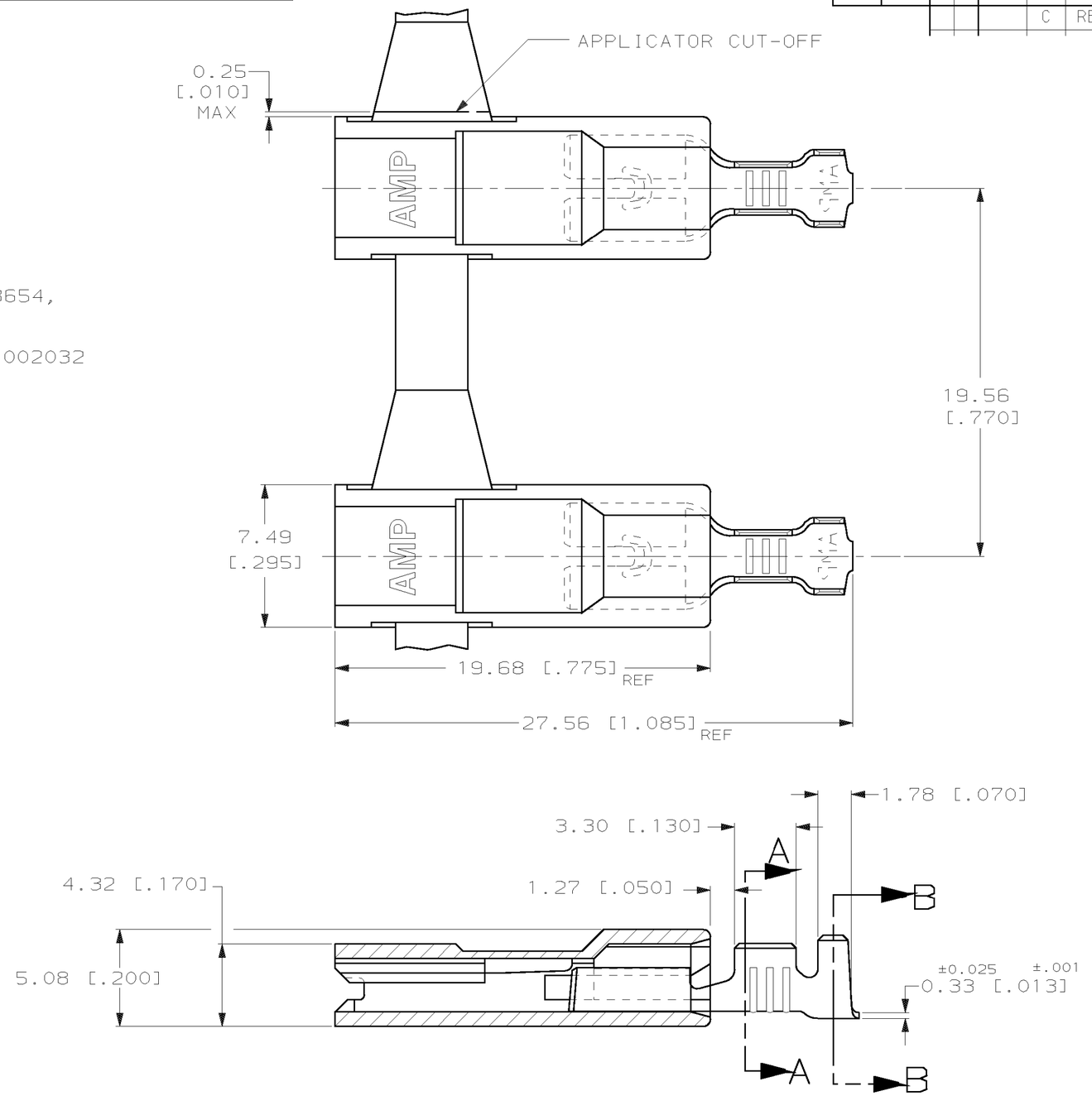

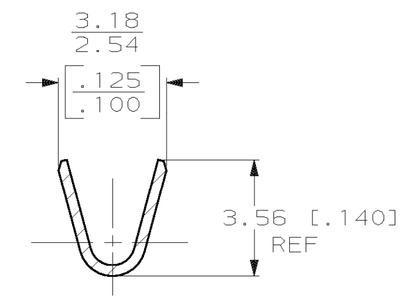

SECTION A–A
SCALE 8:1

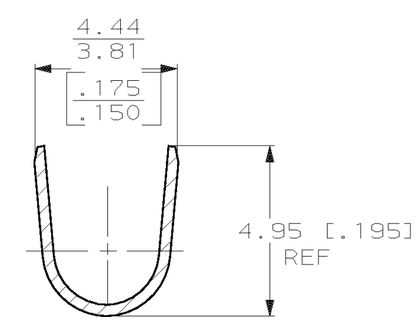

SECTION B–B
SCALE 8:1

STANDARD	NATURAL	TIN 2	2.29-3.30 [.090-.130]	0.5-1.3 mm² [20-16]	0.813 [.032]	521284-2
	NATURAL	PLAIN				521284-1
PACKAGING	HOUSING COLOR	TERMINAL FINISH	INSULATION RANGE	WIRE SIZE	MATING TAB THK ±0.025 [±.001]	PART NO

DO NOT SCALE PRINT.
UNLESS SPECIFIED
DIMENSIONS IN mm [INCHES]
TOLERANCES ON :
2 PLC DEC ± -
3 PLC DEC ± 0.25 [.010]
ANGLES ± -

MATERIAL
TERMINAL - H04 BRASS
HOUSING - 6/6 VO NYLON

FINISH
TERMINAL - SEE TABLE
HOUSING - SEE TABLE

DR 13MAR00 JR RUTH
CHK 13MAR00 MS FEHER
APPD 13MAR00 J HUMMEL
APPD 13MAR00 J HUMMEL
PRODUCT SPEC 118-1285
APPLICATION SPEC 114-2124
WEIGHT _

AMP INCORPORATED
Harrisburg, Pa. 17105

NAME
ASSEMBLY, RECEPTACLE,
ULTRA-POD, 4.8 [.187] SERIES

SIZE C | CAGE CODE 00779 | DRAWING NO 521284
SCALE 5:1 | SHEET 1 OF 1

AMP 1471-6 REV 6-89

CUSTOMER DRAWING

14-APR-00 07:12:35 amp13469 /home/amp13469/edmmod