THIS COPY IS PROVIDED ON A RESTRICTED BASIS AND IS NOT TO BE USED IN ANY WAY DETRIMENTAL TO THE INTERESTS OF PANDUIT CORP.

PANDUIT PART NUMBER	STUD SIZE	DIMENSIONS in.				
		A ±.020	W ±.010	C ±.015	M ±.020	H ±.010
PV12-6HDR	#6	1.05 (26.67)	.31 (7.87)	.35 (8.89)	.89 (22.61)	.15 (3.81)
PV12-8HDR	#8	1.05 (26.67)	.31 (7.87)	.35 (8.89)	.89 (22.61)	.17 (4.32)
PV12-10HDR	#10	1.08 (27.43)	.37 (9.40)	.33 (8.38)	.89 (22.61)	.20 (5.08)
PV12-14HDR	1/4"	1.23 (31.24)	.52 (13.21)	.42 (10.67)	.97 (24.64)	.27 (6.86)
PV12-56HDR	5/16"	1.23 (31.24)	.52 (13.21)	.42 (10.67)	.97 (24.64)	.34 (8.64)
PV12-38HDR	3/8"	1.31 (33.27)	.58 (14.73)	.46 (11.68)	1.02 (25.91)	.40 (10.16)

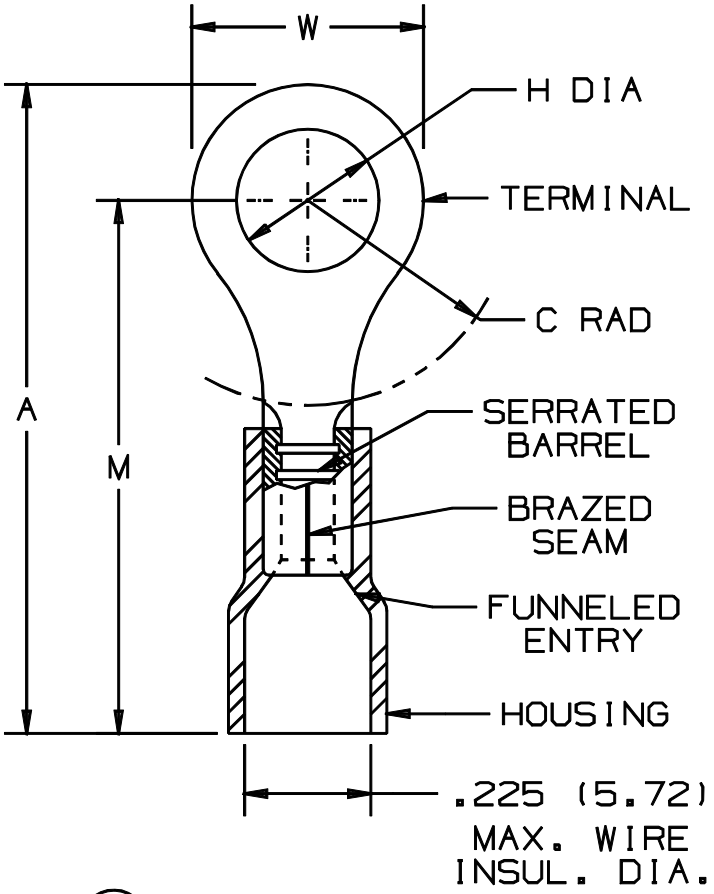

NOTES:

1. UL LISTED AND CSA CERTIFIED FOR:
   A. 600V. MAX. VOLTAGE RATING
   B. #16-12 AWG STRANDED COPPER WIRE
   C. 221° F (105° C) MAX. TEMP. RATING
2. MATERIAL:
   A. STAMPING - .05" (1.27) THK COPPER, TIN PLATED
   B. HOUSING - VINYL, YELLOW
3. PACKAGE QTY: STD. PKG. 50
   BULK PKG. 500
4. DIMENSIONS IN BRACKETS ARE IN MILLIMETERS
5. INSTALLATION TOOLS:
   A. UL LISTED AND CSA CERTIFIED:
      CT-550, CT-1550 & CT-1551
   B. PANDUIT APPROVED: CT-460

UL LISTED 587H E52164

CSA CERTIFIED LR31212

A41281_02

REV	DATE	BY	CHK	DESCRIPTION	ECN	PM	APP
02		JKD		ADDED CT-1550 & CT-1551 TO NOTE 5			
1	7-88	DW		REDRAWN WITH REVISIONS			

PANDUIT CORP. TINLEY PARK, ILLINOIS

#16-12 BARREL FUNNELED VINYL INSULATED HEAVY DUTY RING TONGUE, .225 (5.72) MAX. WIRE INSULATION DIAMETER

DRAWN BY	CHK'D	SCALE	DRAWING NO.
DAW		NONE	A41281A