used for: D-SUB

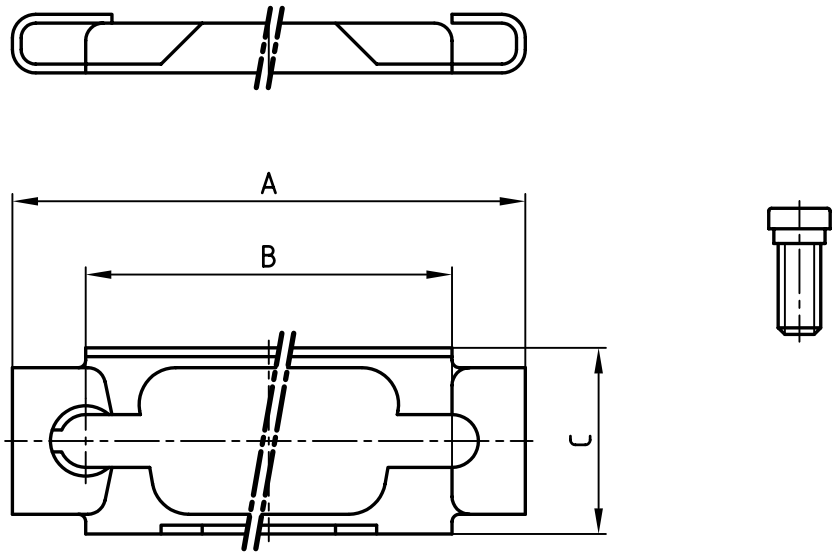

A set consists of:

1 frame

2 self-tapping screws

(for plastic and metal)

No. of Pos:	A	B	C	Part No:
9	35.0	25.0	12.7	**160X10159X**
15	43.7	33.3	12.7	**160X10169X**
25	57.4	47.0	12.7	**160X10179X**
37	73.9	63.5	12.7	**160X10189X**
50	72.5	61.1	15.5	**160X10199X**

Directive 2002/95/EC „RoHS“ Compliant

THIS DRAWING MAY NOT BE COPIED OR REPRODUCED IN ANY WAY, AND MAY NOT BE PASSED ON TO A THIRD PARTY WITHOUT WRITTEN PERMISSION. OWNERSHIP AND COPYRIGHT OF CONEC GmbH

DO NOT ALTER CAD DRAWING BY HAND

rev.	description	date	name

tolerance DIN ISO 2768-m

2002	date	name
drawn	12.03.	Schmidt
appd.	12.03.	Mickenbecker
norm		
d-old	KAT1IX5A	

CONEC®

scale: 2:1

material:

title: Slide-lock Typ 3
with locking bolt
9 - 50 pos.

dwg no: 16K1A602

AutoCAD 2000

DIN-A 4

sh: 1/1

part no: SEE TABLE