THIS DRAWING IS UNPUBLISHED. RELEASED FOR PUBLICATION -,- .
© COPYRIGHT - BY TYCO ELECTRONICS CORPORATION. ALL RIGHTS RESERVED.

LOC	DIST
FT	0

REVISIONS

P	LTR	DESCRIPTION	DATE	DWN	APVD
	S	REVISED PER 0G3B-0956-04	11/19/04	SS	GS
	S1	REVISED PER ECO-09-021826	6JAN10	KK	AEG

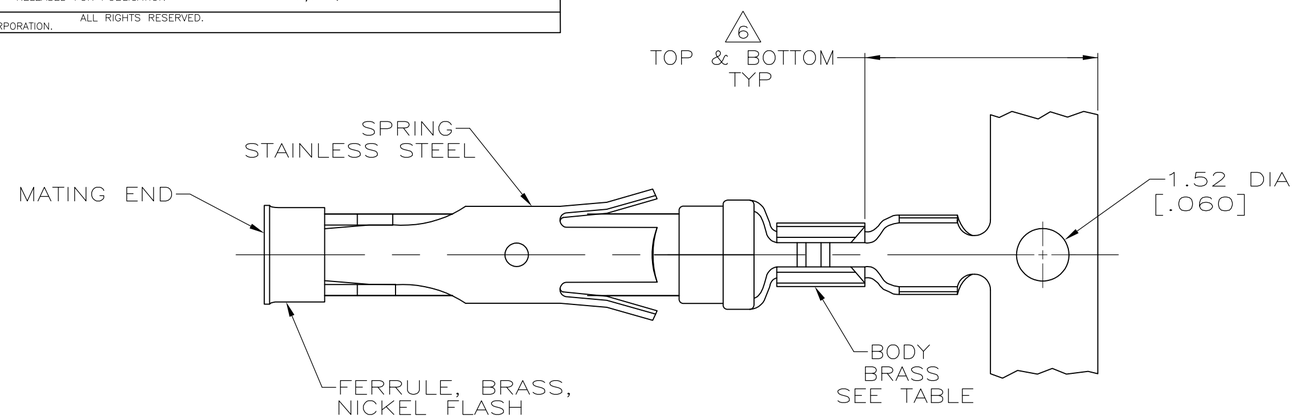

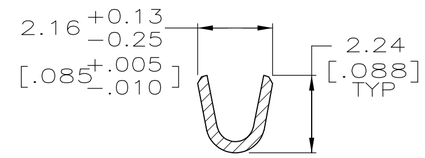

SECTION A–A

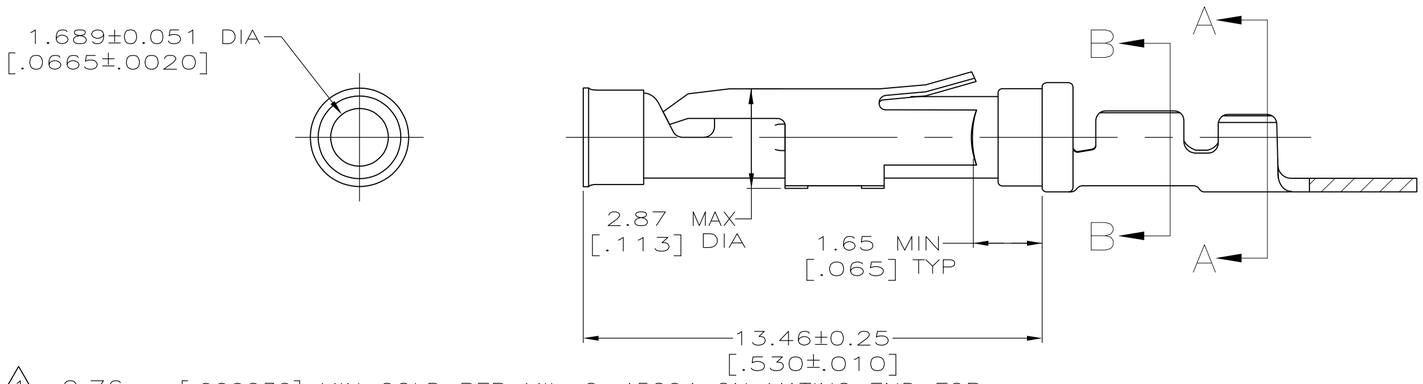

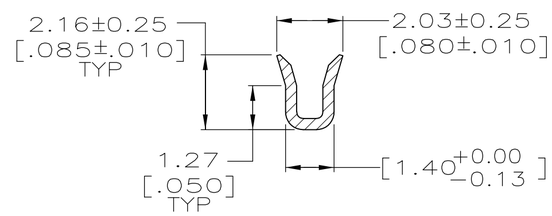

SECTION B–B

1. 0.76μm [.000030] MIN GOLD PER MIL–G–45204 ON MATING END FOR A LENGTH OF 5.08 [.200] MIN WITH GOLD FLASH ON THE REMAINDER OVER 0.76μm [.000030] MIN NICKEL PER QQ–N–290.
2. 1.27um [.000050] MIN TIN–LEAD PER MIL–T–10727 OVER 0.76um [.000030] MIN NICKEL PER QQ–N–290.
3. 0.76μm [.000030] MIN GOLD PER MIL–G–45204 ON MATING END FOR A LENGTH OF 5.08 [.200] MIN WITH A UNIFORM GRADIENT TO 0.25μm [.000010] MIN GOLD PER MIL–G–45204 ON THE REMAINDER OVER 0.76μm [.000030] MIN NICKEL PER QQ–N–290.
4. 0.38μm [.000015] MIN GOLD PER MIL–G–45204 ON MATING END FOR A LENGTH OF 5.08 [.200] MIN WITH GOLD FLASH ON THE REMAINDER OVER 0.76μm [.000030] MIN NICKEL PER QQ–N–290.
5. 1.27μm [.000050] MIN GOLD PER MIL–G–45204 ON MATING END FOR A LENGTH OF 5.08 [.200] MIN WITH GOLD FLASH ON REMAINDER OVER 1.90μm [.000075] MIN NICKEL PER QQ–N–290.
6. GOLD PLATING NEED NOT APPEAR IN THIS AREA EXCEPT 66424–9 HAS GOLD PLATING ON INSULATION BARREL.
7. REVERSE REELED FOR MINI–APPLICATOR.
8. WIRE RANGE 26–30 AWG.
   INSULATION RANGE 1.02[.040]–1.52[.060].
9. 0.38μm [.000015] MIN GOLD PER MIL–G–45204 ON MATING END FOR A LENGTH OF 5.08 [.200] MIN, 1.27μm [.000050] MIN TIN–LEAD PER MIL–T–10727 FOR A LENGTH OF 5.69 [.224] MIN ON OPPOSITE END, BOTH OVER 1.27μm [.000050] MIN NICKEL PER QQ–N–290 ON ENTIRE CONTACT.
10. 1.27um [.000050] MIN TIN PER MIL–T–10727 OVER 0.76um [.000030] MIN NICKEL PER QQ–N–290.
11. OBSOLETE PARTS: OBSOLETE CIS STREAMLINING PER D.RENAUD/D.SINISI

	REELING	BODY FINISH	LOOSE PIECE REF	PART NO.
	7	10	–	1–66424–1
OBSOLETE	7	9	66428–5	1–66424–0
OBSOLETE	7	5	–	66424–9
	7	1	66428–4	66424–8
	7	4	66428–3	66424–7
	7	2	–	66424–6
OBSOLETE	7	3	~~66428–1~~	11 ~~66424–5~~
	STANDARD	4	66428–3	66424–3
OBSOLETE	STANDARD	3	~~66428–1~~	66424–1

THIS DRAWING IS A CONTROLLED DOCUMENT.

DIMENSIONS: INCHES

TOLERANCES UNLESS OTHERWISE SPECIFIED:
0 PLC ± –
1 PLC ± –
2 PLC ± 0.13 [.005]
3 PLC ± –
4 PLC ± –
ANGLES ± –

MATERIAL: SEE CALLOUTS
FINISH: SEE CALLOUTS

DWN R.SHIREY 08/06/91
CHK R.STONE 9–19–91
APVD –
PRODUCT SPEC –
APPLICATION SPEC –
WEIGHT –

Tyco Electronics
Tyco Electronics Corporation
Harrisburg, Pa 17105–3608

NAME: SOCKET ASSEMBLY, .062, TYPE III+

SIZE	CAGE CODE	DRAWING NO	RESTRICTED TO
A2	00779	C–66424	–

CUSTOMER DRAWING | SCALE 8:1 | SHEET 1 OF 1 | REV S1

66424

AMP 1471–9 REV 31MAR2000