KILO INTERNATIONAL

Mechanical Specifications: *DDS SERIES*

DDS90 - Black Gloss, DDS75 - Black Matte & Clear Gloss, DDS50 - Clear Matte

DDS Series: The "DDS Series" knob is our very popular "DD Series" with an attractive skirt extended on the bottom portion of the knob for easier viewing fo the rotation from atop. Indicator "triangle" located on the skirt. Two 6-32 set screws.

TOP VIEW **SIDE VIEW**

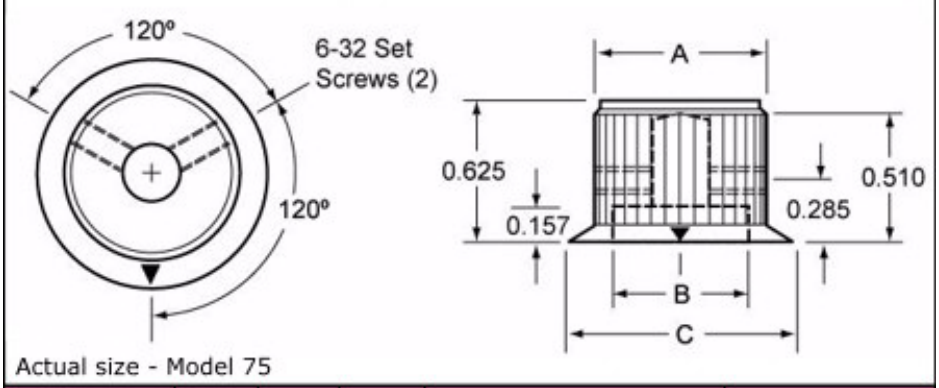

Actual size - Model 75

MODEL	A	B	C	COLOR CHOICE	SHAFT
50	.500	.375	.685	1 - CLEAR GLOSS	5 - .250
75	.750	.590	1.000	2 - BLACK GLOSS	6 - .125
90	.925	.708	1.250	3 - CLEAR MATTE	6mm - 6mm
				4 - BLACK MATTE	

contact:
KILO INTERNATIONAL

1952 Ironton Blvd
Provo, UT 84606
USA

TEL 801.377.5530
FAX 801.377.5573

Copyright ©2005 Kilo International

KILOINTERNATIONAL.COM KILOINTERNATIONAL.COM KILOINTERNATIONAL.COM KILOINTERNATIONAL.COM KILOINTERNATIONAL.COM KILOINTERNATIONAL.COM