THIS DRAWING IS UNPUBLISHED. RELEASED FOR PUBLICATION -,- .
© COPYRIGHT - BY TYCO ELECTRONICS CORPORATION. ALL RIGHTS RESERVED.

LOC	DIST
FT	64

REVISIONS

P	LTR	DESCRIPTION	DATE	DWN	APVD
	G	REV PER OG3C-0162-99	17NOV00	RB	HW
	G1	REVISED PER ECO-09-021510	05SEP09	KK	AEG

1. RECEPTACLE ACCEPTS A .008-.014 THICK I.C. LEAD.
2. TUBE LOADED.
3. TWO .000015 MIN THK. GOLD STRIPES IN CONTACT AREA WITH TIN-LEAD (93/7) ON SOLDER LEGS, BALANCE OF CONTACT NICKEL PLATED.
4. OBSOLETE PARTS: OBSOLETE CIS STREAMLINING PER D.RENAUD/D.SINISI

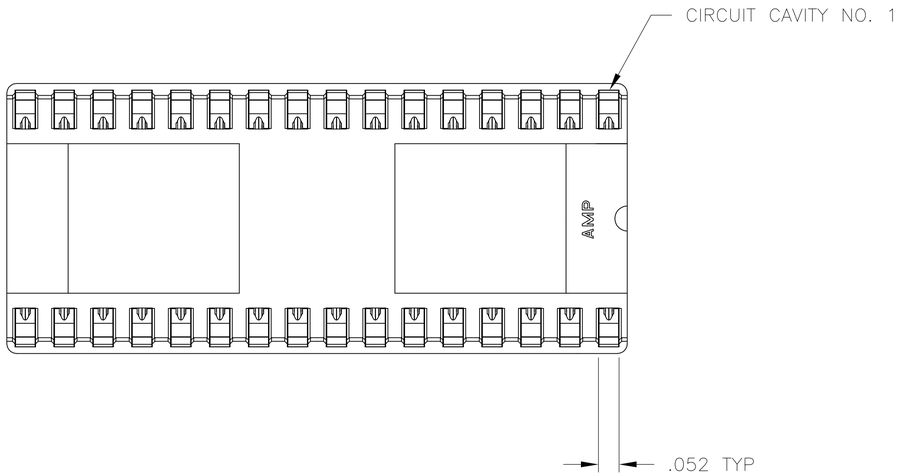

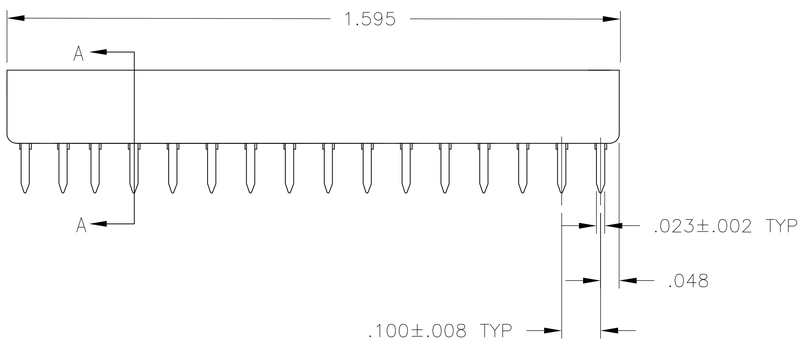

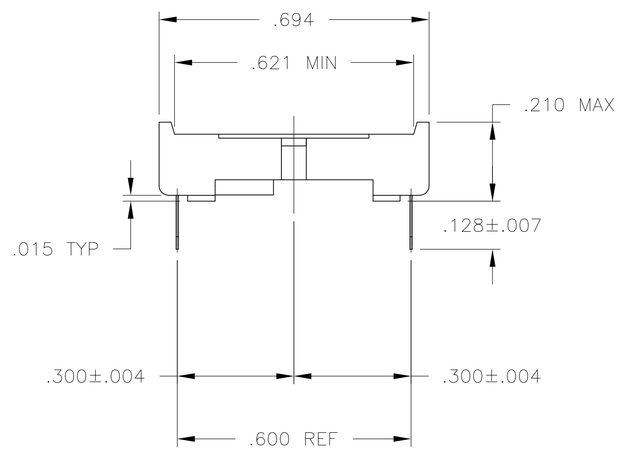

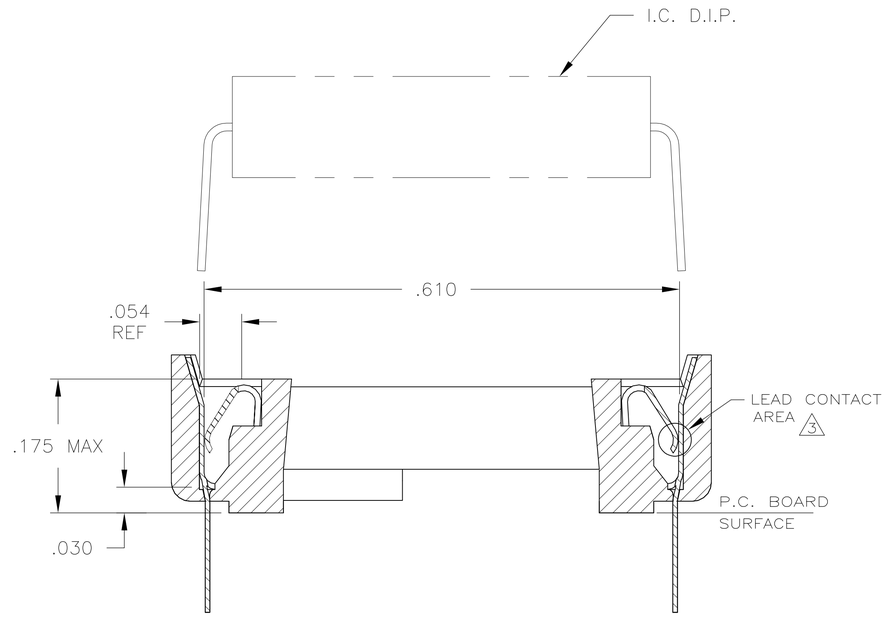

SECTION A-A
SCALE 10:1

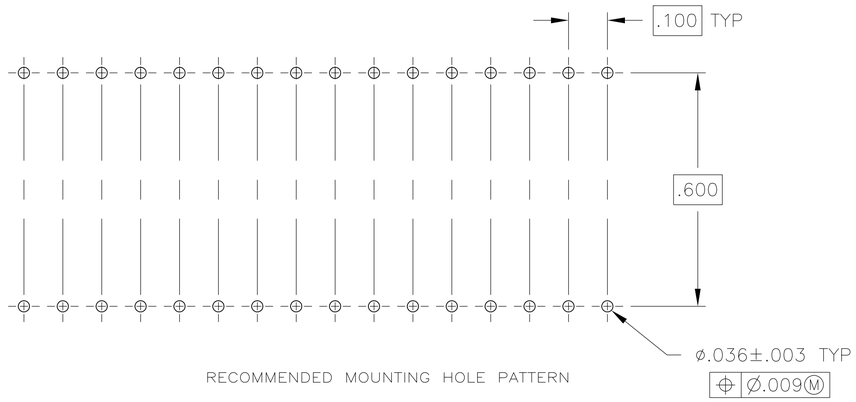

RECOMMENDED MOUNTING HOLE PATTERN

	CONTACT FINISH	CONTACT MAT'L	HOUSING MATERIAL	PART NO.
4 OBSOLETE	3	PHOS. BRZ	BROWN GLASS-FILLED PCT	2-382470-4
	TINNED	PHOS. BRZ	BROWN GLASS-FILLED PCT	2-382470-3
OBSOLETE	TINNED	BE.CU.	BROWN GLASS-FILLED PCT	2-382470-1

THIS DRAWING IS A CONTROLLED DOCUMENT.

DIMENSIONS: INCHES

TOLERANCES UNLESS OTHERWISE SPECIFIED:
0 PLC ± -
1 PLC ± -
2 PLC ± -
3 PLC ± .005
4 PLC ± -
ANGLES ± -

MATERIAL: SEE TABLE
FINISH: SEE TABLE

DWN R BROWN 04JAN01
CHK H WYNKOOP 17NOV00
APVD H WYNKOOP 17NOV00

PRODUCT SPEC 108-1066
APPLICATION SPEC 114-1052
WEIGHT -

Tyco Electronics
Tyco Electronics Corporation
Harrisburg, PA 17105

NAME: SOCKET ASSY, DIP, HT, 32 POS, DIPLOMATE™ DL
-

SIZE	CAGE CODE	DRAWING NO	RESTRICTED TO
A1	00779	C-382470	-

CUSTOMER DRAWING | SCALE 5:1 | SHEET 1 OF 1 | REV G1